TECHNICAL DATA SHEET

ROXOR

Sales Code: Cezav002

Description: Ava W/H Pan Sc Seat & Conc Cistern

Packaging Details

Barcode: 5056678431511

TECHNICAL DATA SHEET

ROXOR

CERAMICS

Sales Code: NCG440

Description: Orlen Rimless Wall Hung Pan & Sc Seat

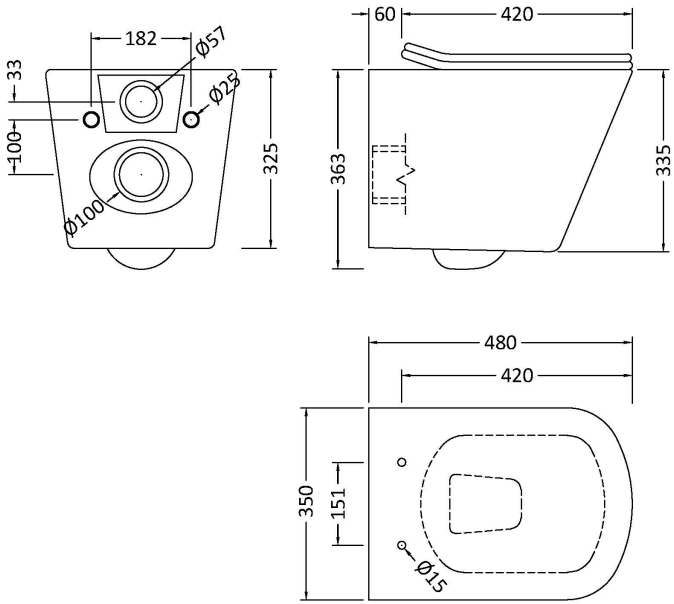

Product Dimensions	
Height (mm):	325
Width (mm):	350
Depth (mm):	480
Nett Weight (kg):	28
Packaging Dimensions	
Height (mm):	430
Width (mm):	435
Depth (mm):	540
Gross Weight (kg):	32
Packaging Data	
Box Colour:	Brown Cardboard Box
Box Qty:	1
Label Size:	100 x 50
Label Colour:	White Label
Label Qty:	2
Outer Box Dimensions (If Applicable)	
Height (mm):	
Width (mm):	
Depth (mm):	
Gross Weight (kg):	
Barcode:	5056462623214
Product Details	
Country of Origin:	China
Fitting Instruction:	No
Certification: CE & UKCA: No	WRAS: N/A WRAS No: N/A
Product Material:	Vitreous China
Fixing Supplied:	No

Pans/Bidets: Trap Style: Includes Seat: Yes

Seats: Seat Type: N/A Material: Urea
Function: Soft Close Hinge Type: Top Fix, Quick Rele
Hinge Material: Stainless Steel

Cisterns: Operating Type: Not Applicable Fittings: Not Applicable
Lever Type: N/A

Basins: Tap Hole: Not Applicable Chain Stay Hole: Not Applicable
Template: Not Applicable Waste Type Req: Not Applicable
Overflow Inc: Not Applicable Overflow Cover: Not Applicable
Inner Bowl Depth (mm): N/A

Sales Code: XTY009

Description: Dual Flush Concealed Cistern With Frame

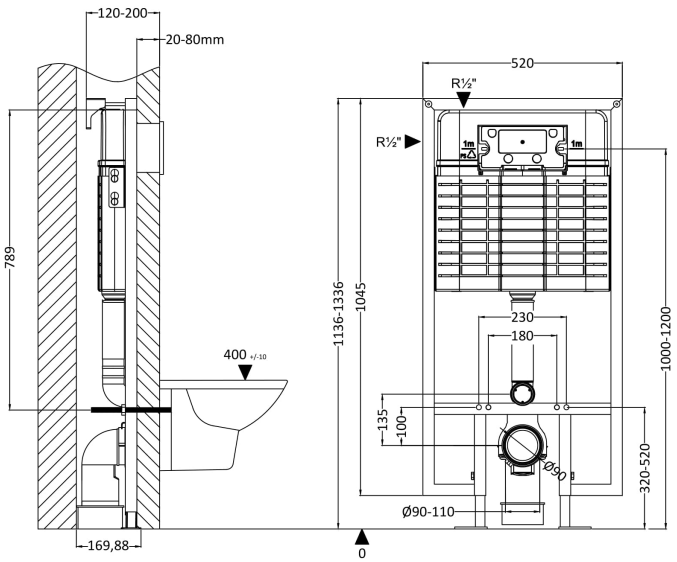

Product Dimensions	
Length (mm):	
Width (mm):	520
Height (mm):	1136
Depth (mm):	204
Nett Weight (kg):	11.17
Packaging Dimensions	
Height (mm):	160
Width (mm):	560
Depth (mm):	1125
Gross Weight (kg):	11.17
Packaging Data	
Box Colour:	Brown Cardboard Box
Box Qty:	1
Label Size:	100 x 50
Label Colour:	White Label
Label Qty:	2
Outer Box Dimensions (If Applicable)	
Height (mm):	
Width (mm):	
Length (mm):	
Depth (mm):	
Gross Weight (kg):	0
Barcode:	5056211854319
Product Details	
Country of Origin:	China
Fitting Instruction:	No
CE & UKCA:	Yes
Product Material:	Stainless Steel
Heating Element Wattage:	Not Applicable
Colour/Finish:	Chrome
Product Diameter:	Not Applicable
Connection Size:	

Sales Code: XTY009PS

Description: Square Dual Flush Push Button

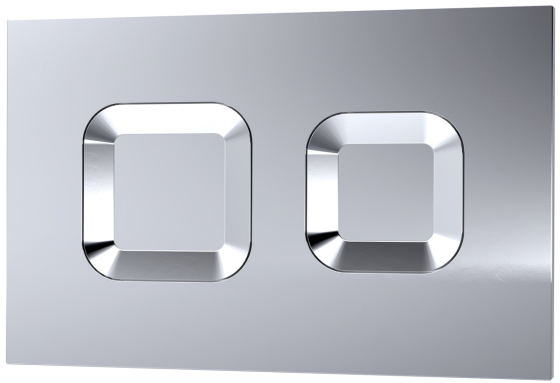

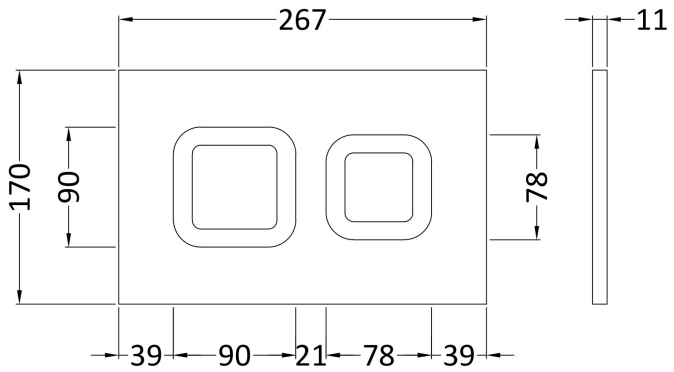

Product Dimensions	
Length (mm):	
Width (mm):	267
Height (mm):	170
Depth (mm):	11
Nett Weight (kg):	0.5
Packaging Dimensions	
Height (mm):	290
Width (mm):	220
Depth (mm):	50
Gross Weight (kg):	0.5
Packaging Data	
Box Colour:	Brown Cardboard Box
Box Qty:	1
Label Size:	100 x 50
Label Colour:	White Label
Label Qty:	2
Outer Box Dimensions (If Applicable)	
Height (mm):	
Width (mm):	
Length (mm):	
Depth (mm):	
Gross Weight (kg):	0
Barcode:	5056211855262
Product Details	
Country of Origin:	United Kingdom
Fitting Instruction:	No
CE & UKCA:	Yes
Product Material:	ABS
Heating Element Wattage:	Not Applicable
Colour/Finish:	Chrome
Product Diameter:	Not Applicable
Connection Size:	