Sales Code: CSB105BG

Description: Victrion Traditional Slide Rail Kit

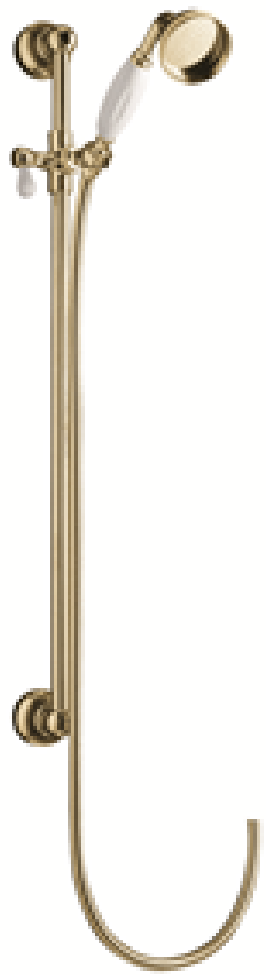

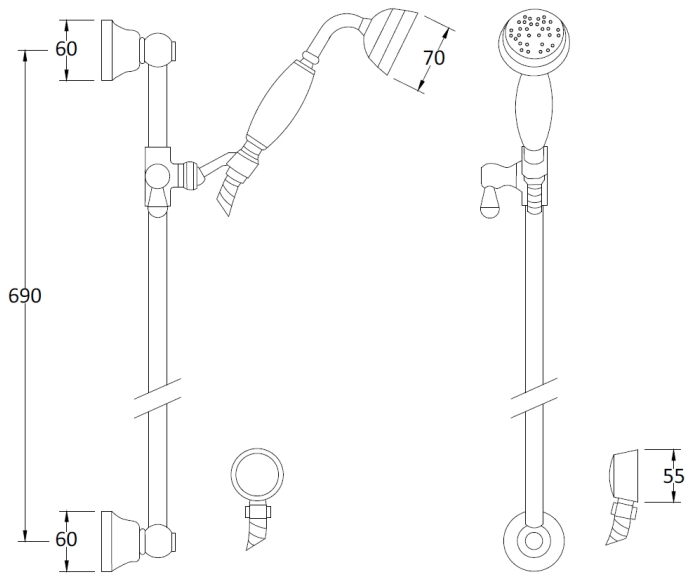

Product Dimensions	
Length (mm):	
Width (mm):	
Height (mm):	
Depth (mm):	
Nett Weight (kg):	1.47
Packaging Dimensions	
Length (mm):	785
Width (mm):	125
Height (mm):	80
Gross Weight (kg):	1.97
Packaging Data	
Box Colour:	
Box Qty:	
Label Size:	x
Label Colour:	
Label Qty:	
Outer Box Dimensions (If Applicable)	
Length (mm):	
Width (mm):	
Height (mm):	
Depth (mm):	
Gross Weight (kg):	
Barcode:	5056462639932
Product Details	
Country of Origin:	United Kingdom
Fitting Instruction:	No
Product Material:	
Mount Type:	
Outlet Elbow Supplied:	
Easy Clean:	
Head Included:	
Handset Included:	
Body Jets Included:	
No of Body Jets:	
Operating Pressure (bar):	
Valve/Cartridge Type:	
Flow Rates (L/min): 0.1 bar:	0.5 bar: 1 bar: 2 bar: 3 bar:
TMV2 Approved:	Approval No:
TMV3 Approved:	Approval No:
WRAS Approved:	Approval No:
Head Function:	
Handset Function:	
Body Jet Info:	
Pipe Size:	
Pipe Centres:	
Colour/Finish:	
Hose Included:	
No. of Outlets:	