TECHNICAL DATA SHEET

ROXOR

BRASSWARE

Sales Code: CTB120

Description: Victrion Lever Deck Mounted Bsm

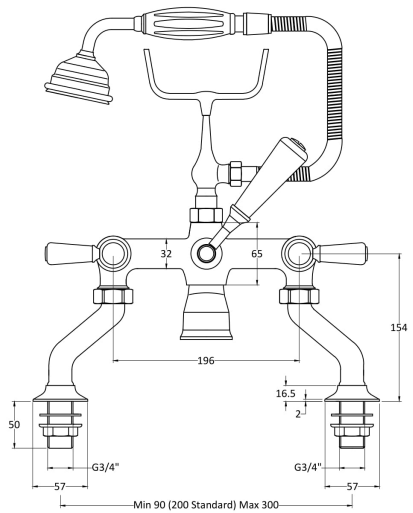

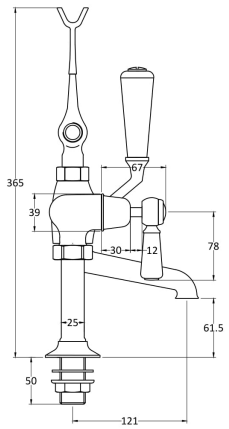

Product Dimensions	
Height (mm):	320
Width (mm):	350
Depth (mm):	155
Length (mm):	
Nett Weight (kg):	4.7
Packaging Dimensions	
Height (mm):	150
Width (mm):	232
Depth (mm):	330
Gross Weight (kg):	4.9
Packaging Data	
Box Colour:	White Cardboard Box
Box Qty:	1
Label Size:	100 x 50
Label Colour:	White Label
Label Qty:	1
Outer Box Dimensions (If Applicable)	
Height (mm):	330
Width (mm):	520
Depth (mm):	360
Length (mm):	
Gross Weight (kg):	0
Barcode:	5056462641669
Product Details	
Country of Origin:	United Kingdom
Fitting Instruction:	No
Product Material:	Brass
Control Type:	Manual
Waste Included:	Waste Not Included
Waste Type:	Not Applicable
WRAS Approval: No	Approval No: N/A
Valve/Cartridge Type:	1/4 Turn Ceramic Disc
Colour/Finish:	Chrome
Mount Type:	Deck
Operating Pressure (bar):	0.2
Flow Rates: (Litres Per Min) 0.1 bar: 10.6 0.5 bar: 28.6 1 bar: 41.4 2 bar: 59 3 bar: 72.8	
Pipe Size:	22 mm (3/4" Bsp)
Pipe Centres:	90-300mm