TECHNICAL DATA SHEET

ROXOR

BRASSWARE

Sales Code: CTB125N

Description: Victrion Lever 3Th Basin Mixer

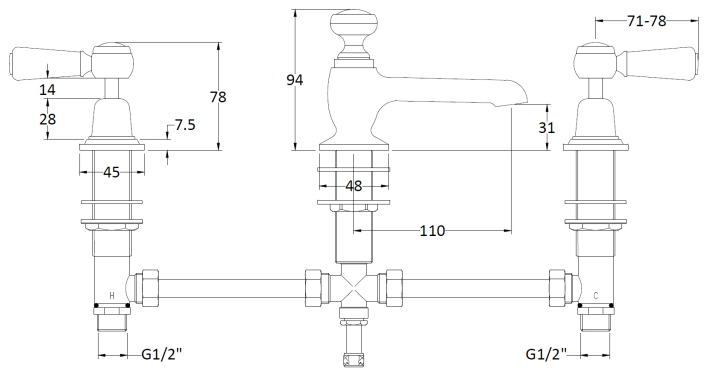

Product Dimensions	
Height (mm):	94
Width (mm):	246
Depth (mm):	140
Length (mm):	
Nett Weight (kg):	2.8
Packaging Dimensions	
Height (mm):	75
Width (mm):	150
Depth (mm):	430
Gross Weight (kg):	3
Packaging Data	
Box Colour:	White Cardboard Box
Box Qty:	1
Label Size:	100 x 50
Label Colour:	White Label
Label Qty:	1
Outer Box Dimensions (If Applicable)	
Height (mm):	495
Width (mm):	555
Depth (mm):	290
Length (mm):	
Gross Weight (kg):	25
Barcode:	5056462641751
Product Details	
Country of Origin:	United Kingdom
Fitting Instruction:	No
Product Material:	Brass
Control Type:	Manual
Waste Included:	Waste Included
Waste Type:	Pop-Up
WRAS Approval: No	Approval No: N/A
Valve/Cartridge Type:	1/4 Turn Ceramic Disc
Colour/Finish:	Nickel
Mount Type:	Deck
Operating Pressure (bar):	0.1
Flow Rates: (Litres Per Min) 0.1 bar: 5.6	0.5 bar: 14 1 bar: 20.2 2 bar: 29 3 bar: 35.4
Pipe Size:	15 mm
Pipe Centres:	N/A