TECHNICAL DATA SHEET

ROXOR

FURNITURE

Sales Code: FLT225

Description: 600 F/S 2-Door Basin Unit

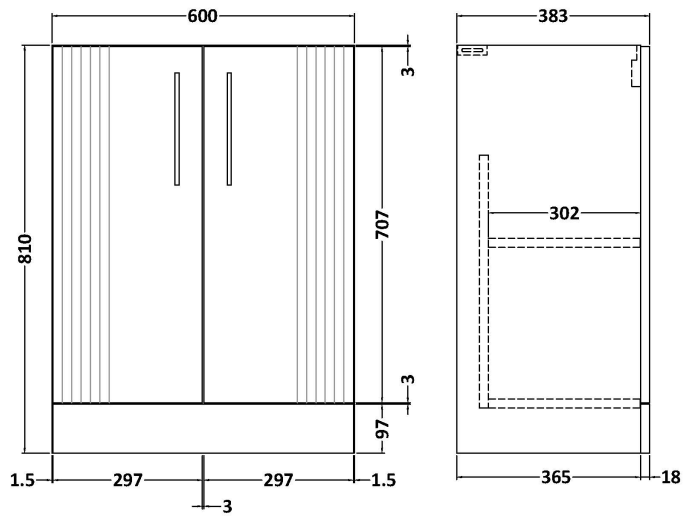

Product Dimensions	
Height (mm):	810
Width (mm):	600
Depth (mm):	383
Nett Weight (kg):	26.2
Packaging Dimensions	
Height (mm):	830
Width (mm):	620
Depth (mm):	405
Gross Weight (kg):	26.7
Packaging Data	
Box Colour:	Brown Cardboard Box - Printed
Box Qty:	0
Label Size:	0 x 0
Label Colour:	Not Applicable
Label Qty:	0
Outer Box Dimensions (If Applicable)	
Height (mm):	
Width (mm):	
Depth (mm):	
Gross Weight (kg):	
Barcode:	5056462655413
Product Details	
Country of Origin:	China
Fitting Instruction:	No
CE & UKCA:	
FSC Certified Materials:	Yes
Colour:	Satin Grey
Construction Method:	Cam & Wood Dowel
Construction Type:	Rigid
Cabinet Finish:	MFC Painted Gloss
Fascia Finish:	Mdf Painted Gloss
Cabinet Thickness (mm):	16
Fascia Thickness (mm):	18
Drawer Included:	No
Drawer Type:	Not Applicable
No of Shelves:	1
Hinge Type:	95 Degree Soft Close
Hinge Included:	Yes, Supplied
Adjustable Legs:	No, Not Required
Fixings Included:	Yes
Handle Style:	Modern
Waste Shroud:	Not Applicable
Handle Included:	Yes, Supplied
Handle Type:	Bar