Sales Code: HTD06

Description: Small Harrow Heated T/Rail 965mmx538mm

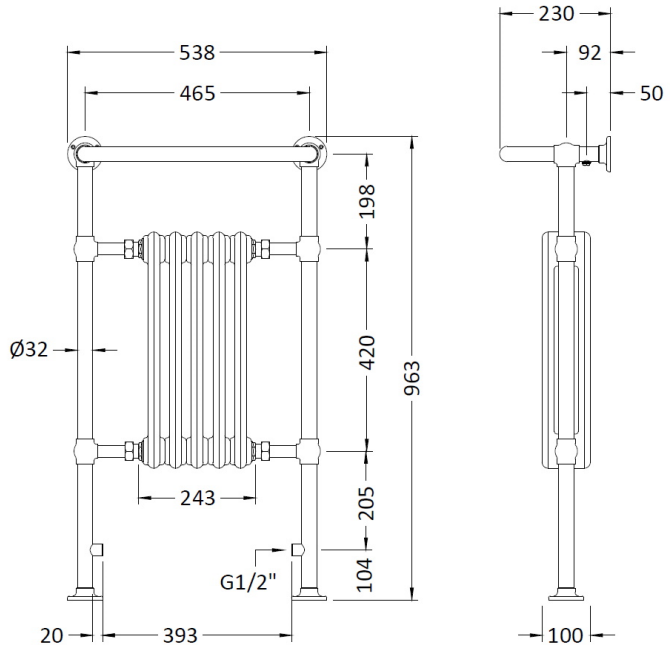

Product Dimensions			
Height (mm):	965		
Width (mm):	538		
Depth (mm):	230		
Length (mm):			
Nett Weight (kg):	13		
Packaging Dimensions			
Height (mm):	294		
Width (mm):	590		
Length (mm):	1020		
Gross Weight (kg):	16.2		
Packaging Data			
Box Colour:	White Cardboard Shrinkwrapped		
Box Qty:	1		
Label Size:	100 x 50		
Label Colour:	White Label		
Label Qty:	2		
Outer Box Dimensions (If Applicable)			
Height (mm):			
Width (mm):			
Length (mm):			
Gross Weight (kg):			
Barcode:	5055369003709		
Product Details			
Country of Origin:	China		
Fitting Instruction:	No		
Certification:	CE & UKCA: No	RoHS: N/A	WEEE: N/A
Colour/Finish:	Chrome/White		
RAL No:	9016		
Product Material:	Steel		
Heat Element Wattage:	Not Applicable		
Heating Element Wattage Compatible:	N/A		
BTU Outputs:	30ºC / 662	50ºC / 1246	60ºC / 1578
Thermal Outputs: (Watts)	30ºC / 194	50ºC / 365	60ºC / 457
Pipe Centres - If Vertical:	250mm		
Pipe Centres - If Horizontal:	N/A		
Max Projection:	220mm		
Tube Diameter:	32mm		
Packaging Volume (L):	178		
Wall to Centre of Tappings:	105		
Floor to Centre of Tappings:	100		
Dual Fuel:	N/A		
IP Rating:			