TECHNICAL DATA SHEET

ROXOR

CERAMICS

Sales Code: LOM233

Description: 1200 Double Bowl Marble Top 1Th

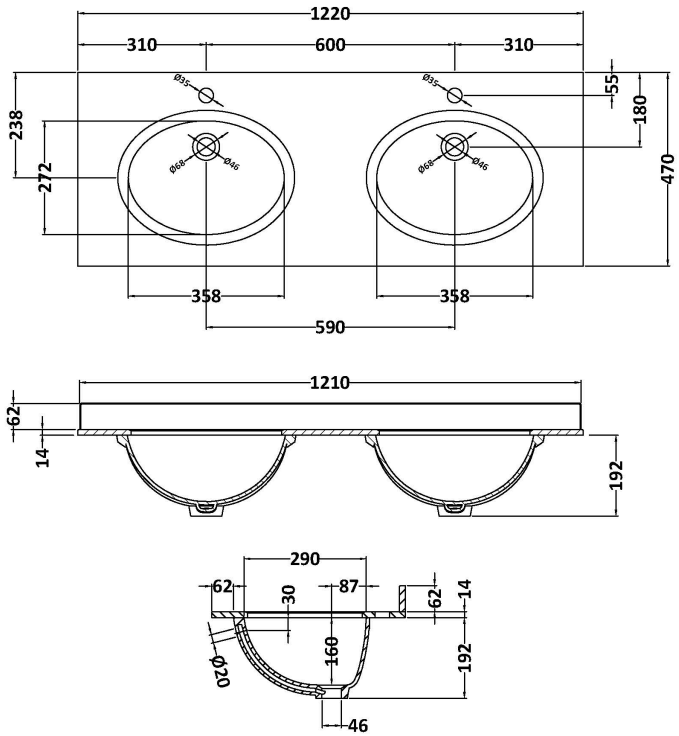

Product Dimensions	
Height (mm):	268
Width (mm):	1220
Depth (mm):	463
Nett Weight (kg):	27.5
Packaging Dimensions	
Height (mm):	310
Width (mm):	1300
Depth (mm):	550
Gross Weight (kg):	28
Packaging Data	
Box Colour:	White Cardboard Box
Box Qty:	1
Label Size:	100 x 50
Label Colour:	White Label
Label Qty:	2
Outer Box Dimensions (If Applicable)	
Height (mm):	
Width (mm):	
Depth (mm):	
Gross Weight (kg):	
Barcode:	5056211819080
Product Details	
Country of Origin:	China
Fitting Instruction:	No
Certification: CE & UKCA: N/A	WRAS: N/A WRAS No: N/A
Product Material:	Vitreous China, Natural Marble
Fixing Supplied:	No

Pans/Bidets: Trap Style: Not Applicable Includes Seat: Not Applicable

Seats: Seat Type: Not Applicable Material: Not Applicable
Function: Not Applicable Hinge Type: Not Applicable
Hinge Material: Not Applicable

Cisterns: Operating Type: Not Applicable Fittings: Not Applicable
Lever Type: Not Applicable

Basins: Tap Hole: One Taphole Chain Stay Hole: No
Template: Not Applicable Waste Type Req: Slotted
Overflow Inc: Yes Overflow Cover: Yes
Inner Bowl Depth (mm): 160mm