TECHNICAL DATA SHEET

ROXOR

CERAMICS

Sales Code: NCU932

Description: Round 350mm W/H Basin

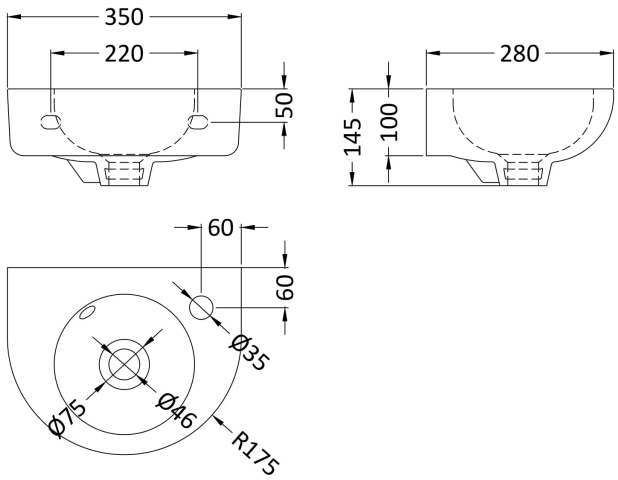

Product Dimensions	
Height (mm):	145
Width (mm):	350
Depth (mm):	280
Nett Weight (kg):	6.8
Packaging Dimensions	
Height (mm):	160
Width (mm):	365
Depth (mm):	305
Gross Weight (kg):	7
Packaging Data	
Box Colour:	Brown Cardboard Box - Printed
Box Qty:	1
Label Size:	100 x 50
Label Colour:	White Label
Label Qty:	2
Outer Box Dimensions (If Applicable)	
Height (mm):	
Width (mm):	
Depth (mm):	
Gross Weight (kg):	
Barcode:	5055369031061
Product Details	
Country of Origin:	Turkey
Fitting Instruction:	No
Certification: CE & UKCA: No	WRAS: N/A WRAS No: N/A
Product Material:	Vitreous China
Fixing Supplied:	Yes

Pans/Bidets: Trap Style: Not Applicable Includes Seat: Not Applicable

Seats: Seat Type: Not Applicable Material: Not Applicable
Function: Not Applicable Hinge Type: Not Applicable
Hinge Material: Not Applicable

Cisterns: Operating Type: Not Applicable Fittings: Not Applicable
Lever Type: Not Applicable

Basins: Tap Hole: One Taphole Chain Stay Hole: No
Template: Not Required Waste Type Req: Slotted
Overflow Inc: Yes Overflow Cover: Yes
Inner Bowl Depth (mm): 95mm