Sales Code: NSR106

Description: Sr Quad Tray 900X900x40

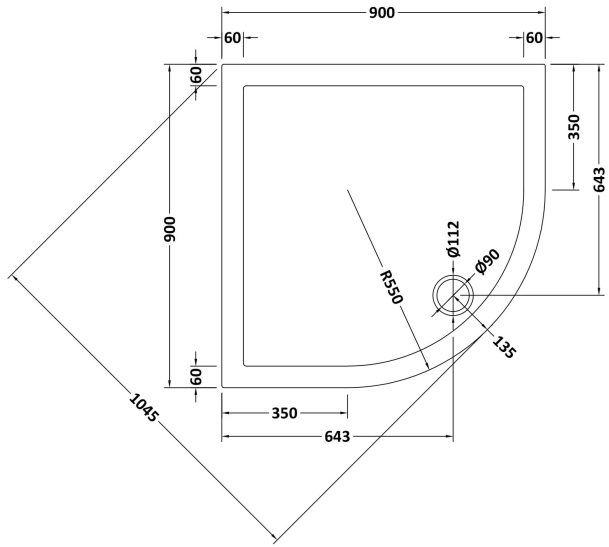

Product Dimensions	
Length (mm):	900
Width (mm):	900
Height (mm):	40
Nett Weight (kg):	27.9
Packaging Dimensions	
Length (mm):	940
Width (mm):	940
Height (mm):	80
Gross Weight (kg):	28.2
Packaging Data	
Box Colour:	Shrinkwrap & Polystyrene
Box Qty:	1
Label Size:	100 x 50
Label Colour:	White Label
Label Qty:	2
Outer Box Dimensions (If Applicable)	
Length (mm):	
Width (mm):	
Height (mm):	
Gross Weight (kg):	
Barcode:	5056211872603
Product Details	
Country of Origin:	United Kingdom
Fitting Instruction:	No
CE & UKCA:	Yes
Colour/Finish:	White
Product Material:	Acrylic Capped ABS Caco3 & Pu
Material Colour Reference:	European White
Radius:	550
Waste Required (mm):	90
Compatible with Leg Kit:	Yes