Sales Code: SBR126ST1

Description: 1 Outlet Bundle Arvan

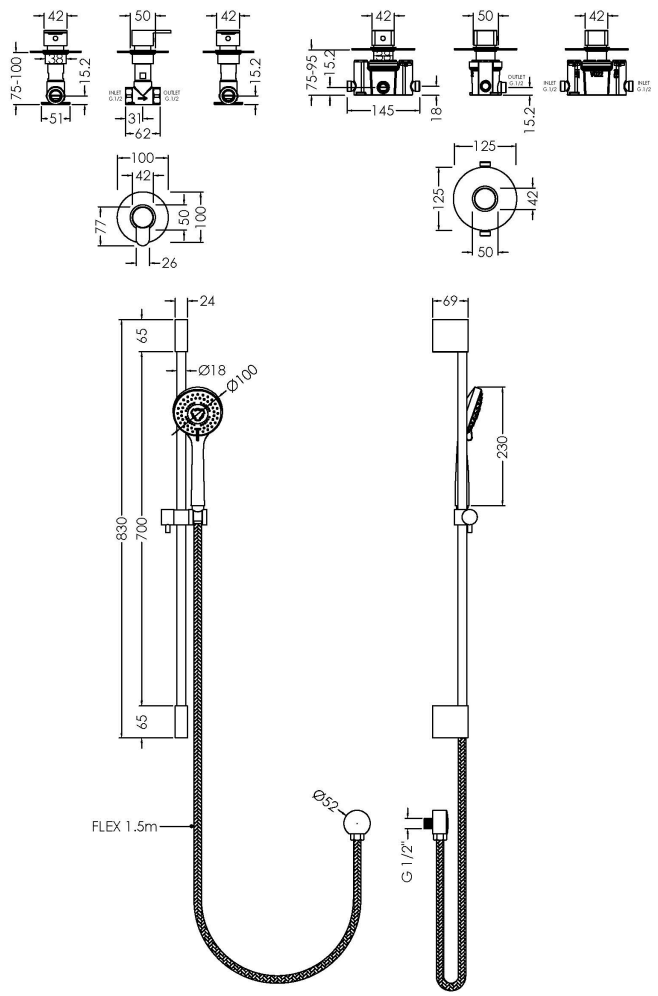

Product Dimensions					
Length (mm):					
Width (mm):					
Height (mm):					
Depth (mm):					
Nett Weight (kg):	0				
Packaging Dimensions					
Length (mm):	0				
Width (mm):	0				
Height (mm):	0				
Gross Weight (kg):	0				
Packaging Data					
Box Colour:					
Box Qty:	0				
Label Size:	0	x 0			
Label Colour:					
Label Qty:	0				
Outer Box Dimensions (If Applicable)					
Length (mm):					
Width (mm):					
Height (mm):					
Depth (mm):					
Gross Weight (kg):					
Barcode:	5056462648330				
Product Details					
Country of Origin:					
Fitting Instruction:	No				
Product Material:	Chrome				
Mount Type:					
Outlet Elbow Supplied:					
Easy Clean:					
Head Included:					
Handset Included:					
Body Jets Included:					
No of Body Jets:					
Operating Pressure (bar):					
Valve/Cartridge Type:					
Flow Rates (L/min): 0.1 bar:	0.5 bar:	1 bar:	2 bar:	3 bar:	
TMV2 Approved:	Approval No:				
TMV3 Approved:	Approval No:				
WRAS Approved:	Approval No:				
Head Function:					
Handset Function:					
Body Jet Info:					
Pipe Size:					
Pipe Centres:					
Colour/Finish:					
Hose Included:					
No. of Outlets:	1				