**Sales Code:** SBR136ST3

**Description:** 3 Outlet Bundle Arvan

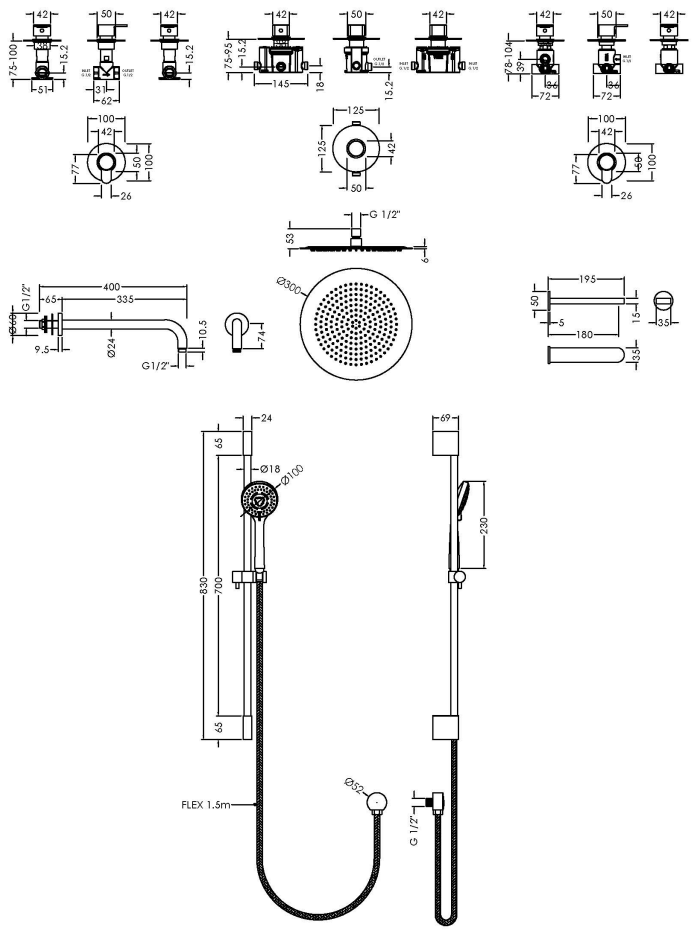


| | | | | | |
|---|---|---|---|---|---|
| **Product Dimensions** | | | | | |
| Length (mm): | | | | | |
| Width (mm): | | | | | |
| Height (mm): | | | | | |
| Depth (mm): | | | | | |
| Nett Weight (kg): | 0 | | | | |
| **Packaging Dimensions** | | | | | |
| Length (mm): | 0 | | | | |
| Width (mm): | 0 | | | | |
| Height (mm): | 0 | | | | |
| Gross Weight (kg): | 0 | | | | |
| **Packaging Data** | | | | | |
| Box Colour: | | | | | |
| Box Qty: | 0 | | | | |
| Label Size: | 0 | x 0 | | | |
| Label Colour: | | | | | |
| Label Qty: | 0 | | | | |
| **Outer Box Dimensions (If Applicable)** | | | | | |
| Length (mm): | | | | | |
| Width (mm): | | | | | |
| Height (mm): | | | | | |
| Depth (mm): | | | | | |
| Gross Weight (kg): | | | | | |
| Barcode: | 5056462648439 | | | | |
| **Product Details** | | | | | |
| Country of Origin: | | | | | |
| Fitting Instruction: | No | | | | |
| Product Material: | Chrome | | | | |
| Mount Type: | | | | | |
| Outlet Elbow Supplied: | | | | | |
| Easy Clean: | | | | | |
| Head Included: | | | | | |
| Handset Included: | | | | | |
| Body Jets Included: | | | | | |
| No of Body Jets: | | | | | |
| Operating Pressure (bar): | | | | | |
| Valve/Cartridge Type: | | | | | |
| Flow Rates (L/min): 0.1 bar: | 0.5 bar: | 1 bar: | 2 bar: | 3 bar: | |
| TMV2 Approved: | Approval No: | | | | |
| TMV3 Approved: | Approval No: | | | | |
| WRAS Approved: | Approval No: | | | | |
| Head Function: | | | | | |
| Handset Function: | | | | | |
| Body Jet Info: | | | | | |
| Pipe Size: | | | | | |
| Pipe Centres: | | | | | |
| Colour/Finish: | | | | | |
| Hose Included: | | | | | |
| No. of Outlets: | 3 | | | | |