Sales Code: WAS220IG

Description: Push Down Basin Waste (Unslotted)

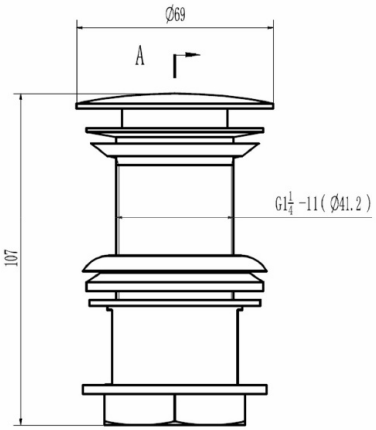

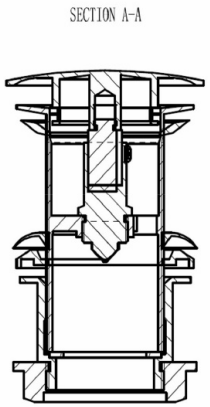

Product Dimensions	
Length (mm):	
Width (mm):	
Height (mm):	
Depth (mm):	
Nett Weight (kg):	0.35
Packaging Dimensions	
Height (mm):	105
Width (mm):	75
Depth (mm):	75
Gross Weight (kg):	0.35
Packaging Data	
Box Colour:	
Box Qty:	
Label Size:	x
Label Colour:	
Label Qty:	
Outer Box Dimensions (If Applicable)	
Height (mm):	
Width (mm):	
Length (mm):	
Depth (mm):	
Gross Weight (kg):	
Barcode:	5056462609478
Product Details	
Country of Origin:	South Africa
Fitting Instruction:	No
CE & UKCA:	
Product Material:	
Heating Element Wattage:	
Colour/Finish:	
Product Diameter:	
Connection Size:	