TECHNICAL DATA SHEET

ROXOR

BATHS

Sales Code: WBS1785L

Description: Left Hand Square Bath 1700mm

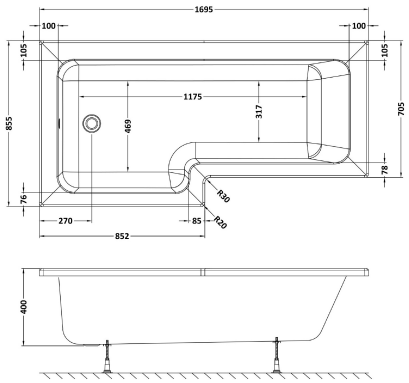

Product Dimensions	
Length (mm):	1700
Width (mm):	850
Depth (mm):	405
Nett Weight (kg):	24
Packaging Dimensions	
Length (mm):	1700
Width (mm):	860
Depth (mm):	400
Gross Weight (kg):	25
Packaging Data	
Box Colour:	Brown Cardboard Sleeve
Box Qty:	1
Label Size:	300 x 35
Label Colour:	White Label
Label Qty:	2
Outer Box Dimensions (If Applicable)	
Length (mm):	
Width (mm):	
Height (mm):	
Gross Weight (kg):	
Barcode:	5056211822318
Product Details	
Country of Origin:	Egypt
Fitting Instruction:	No
Certification:	FSC: CE & UKCA: Yes
Material Colour Reference:	European White
Product Material:	Acrylic
Material Thickness:	4mm
Volume (Ltr):	235L
Displaced Capacity:	165L
Leg Set Included:	Legset Included
Waste Included:	Waste Not Included
Drilled/Undrilled:	Undrilled For Taps
Includes Grips:	No Grips Supplied
Embossed:	No
No of Tapholes:	None
Anti-Slip:	No